CUBA 25 SOFA-BED

Rodolfo Dordoni

cappellini

The Cuba 25 collection expands with the addition of a two-seat sofa bed with pull-out bed that comes in two different sizes. The fully removable slip covers come in fabric or leather with foam-quilted covering for backs and arms.

Materials used_

Structure:
Wooden conglomerate panels, massive fir, poplar plywood, metal frame

Padding:
1. Multi-density polyurethane foam and fibre, with cover removable in fabric, leather G or Extra G2

Seat cushion:
2. Polyurethane foam and feather

Feet:
3. Black plastic Ø mm 60 - 21/4” x h 40 - 11/2”

Loose cushions:
4. Useful as a completion made in foam and leather, available in both the same colour and material of the requested cover (CU_25: cm 60x60x8 - 231/2”x231/2”x3”)

Bedstead:
CUS10 and CUS13 bedstead with ash plywood slats
CUS16 welded metal bedstead

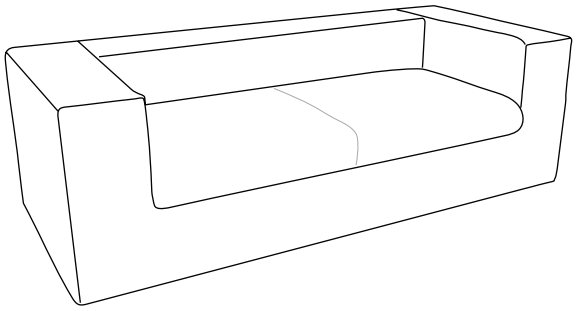

Dimensions_

CUS10

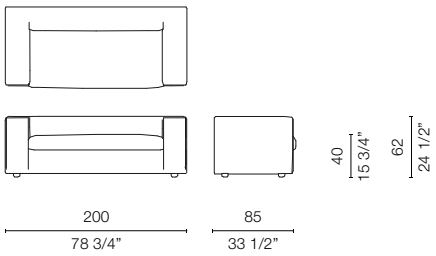

CUS13

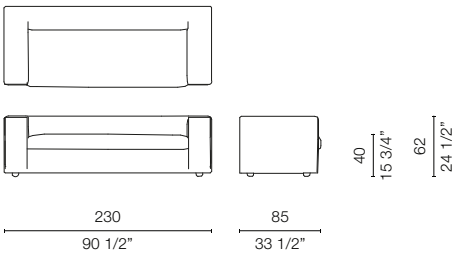

cappellini

CUS16

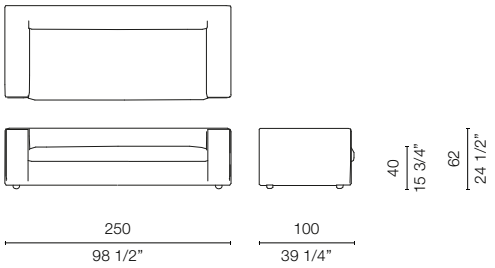

Cap Design S.p.A.
via Busnelli, 5
|-20821 Meda (MB)

tel. +39 0362372486
www.cappellini.it
cappellini@cappellini.it